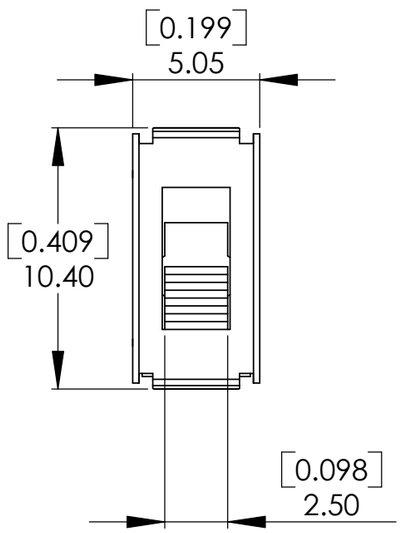

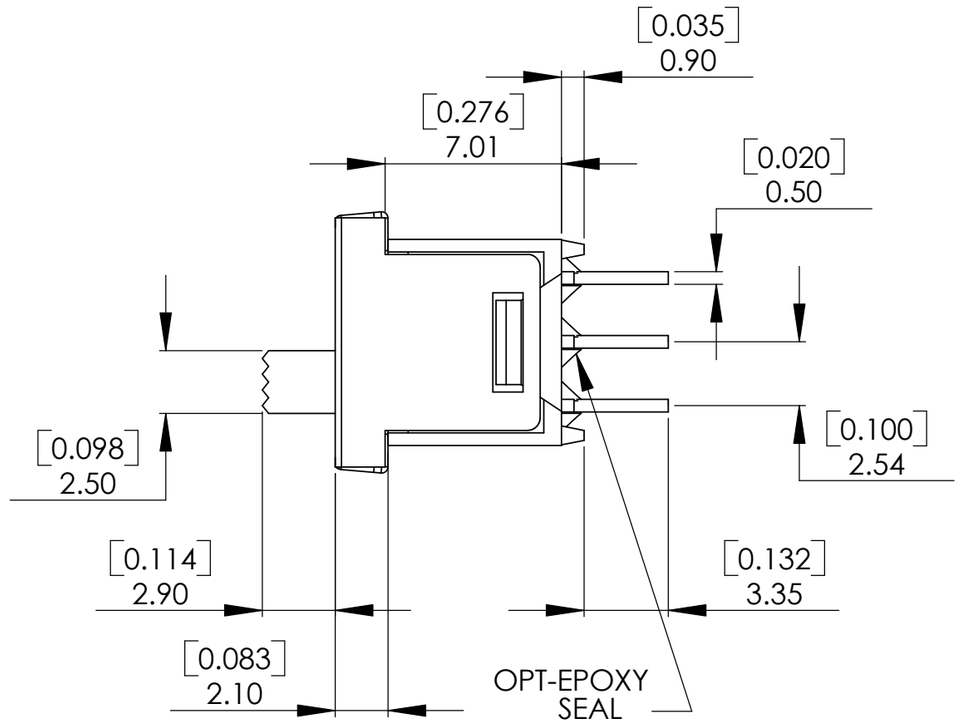

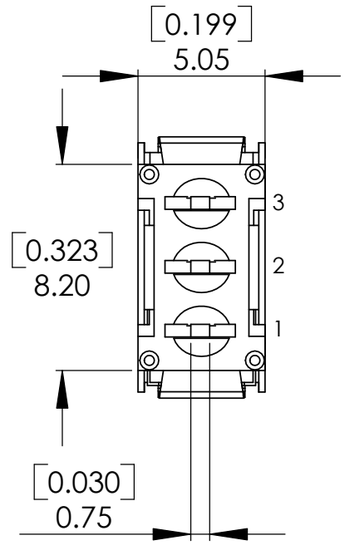

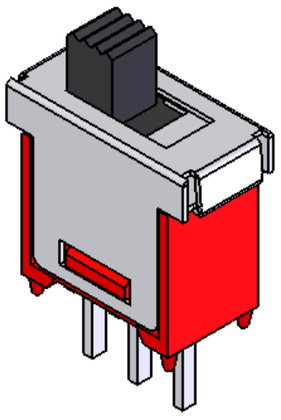

P.C. MOUNTING

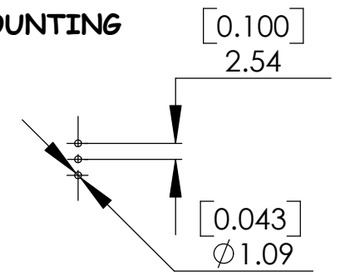

Schematic

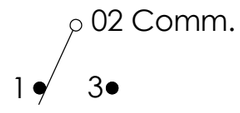

Model NO.	TYPE		
MSDS-12	ON	NONE	ON
Tem. Comm.	2-1	OPEN	2-3

SPECIFICATIONS:

CONTACT RATING : 3 AMPS @ 120 V AC or 28 V DC.
1AMPS @250 V AC or 0.4VA AMPS @ 20V AC or DC
ELECTRICAL LIFE : 6,000 make-and-break cycles at full load.
CONTACT RESISTANCE : 10 mΩ max. initial @ 2-4 V DC.
100 mA, for both silver and gold plated contacts.
INSULATION RESISTANCE : 1,000 MΩ min.
DIELETRIC STRENGTH : 1,000 V RMS @ sea level.
OPERATING TEMPERATURE : -30 ℃ to 85 ℃

MATERIALS:

CASE : Diallyl phthalate (DAP)(UL-94V-0).
ACTUATOR : Nylon.
HOUSING : Brass.
TERMINAL/CONTACT : Brass, with silver or gold plated.
or gold over silver
SWITCH SUPPORT : Brass, tin plated.

喜威達企業股份有限公司
SWEETA PRODUCTS CORPORATION
23552 台北縣中和市中正路799號1樓
Tel：02-2226-8001 Fax：02-2226-8002
http：//www.sweeta.com.tw E-mail：sweeta.tw@msa.hinet.net

TOLERANCE
XX. ± 0.5
X. ± 0.2
.X ± 0.2
.XX ± 0.2

ITEM NO		DATA	
CHECRED BY		DRAWN BY	