1、All dimensions in mm〔Inch〕

2、General tolerance : >10±0.4
<10±0.25

3、Electrical rating : 6A 250V & 10A 125VAC[UL]
4(1)A/250VAC[VDE.ENEC10/CQC]

4、Contact resistance : ＜20mΩ(initial)

5、Insulation resistance : ＞1000MΩ(500DC between open contacts)

6、Dielectric strength : >1500V 1 mintute

7、Mechanical life ： >30000 cycles

8、Electrical life： >10000 cycles

9、Temperature rise at the terminal ： Max.30℃

10、Solder ability of terminal : Max350℃,3S(no pressure may be placed in the terminals when soldering by hand)

11、Materials : Frame / Actuator: PA66 / PC&PA66

12、Flammability: UL94-V2

CIRCUIT SPST

POLE FUNCTION	OPTIONS OF FUNCTION		
	A	——	B
SPST	1-1a	——	OFF

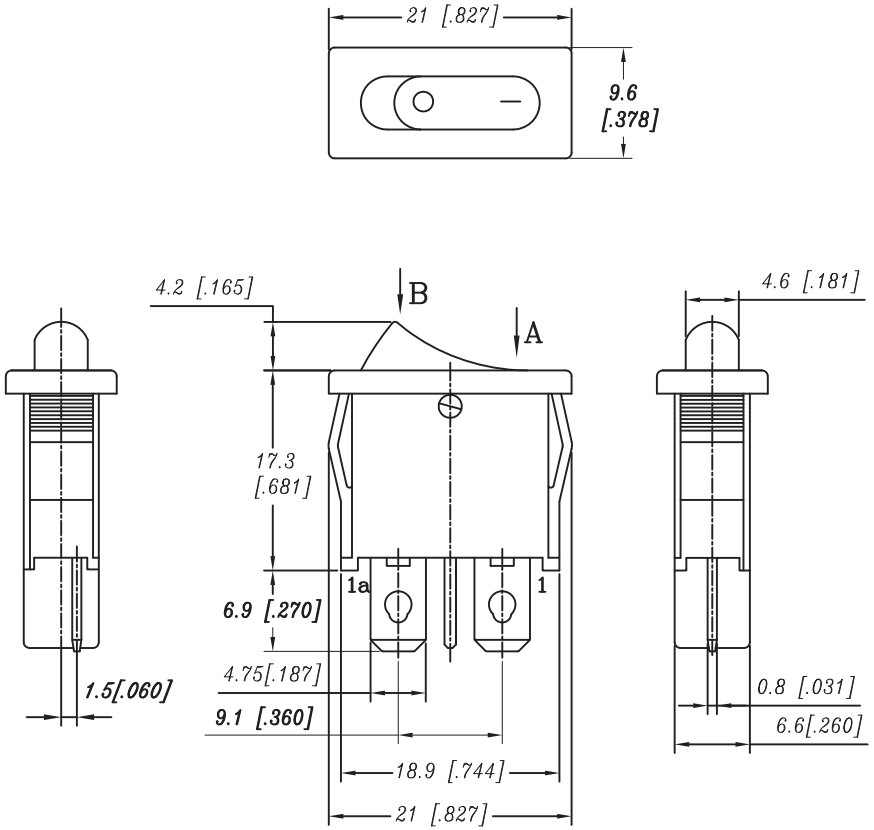

Color	Housing	Actuator
K(Black)	V	V
W(White)		
R(Red)		
G(Gray)		
O(Orange)		
B(Blue)		
Y(III. Yellow)		
M(III. Green)		
F(III. Blue)		
T(III. White)		
D(III. Red)		

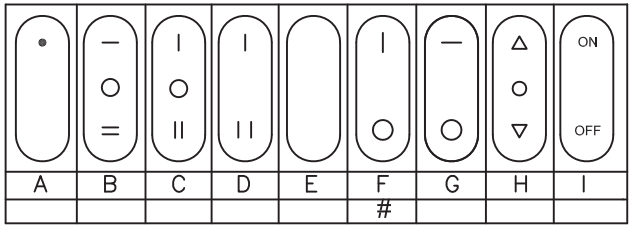

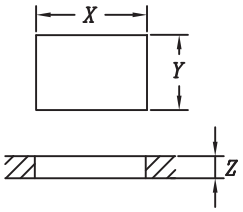

PANEL CUT-OUT

Z	Y	X
0.7~1.25〔.028~.049〕	6.95~7.05〔.274~.278〕	19.2~19.3〔.756~.760〕
1.25~2.0〔.049~.079〕	6.95~7.05〔.274~.278〕	19.25~19.35〔.758~.762〕
2.0~3.0〔.079~.118〕	6.95~7.05〔.274~.278〕	19.3~19.4〔.760~.764〕

Part No.	SR612KKFT0F	喜威達企業股份有限公司 SWEETA PRODUCTS CORPORATION					
Dwg. NO.	R612-60904						
Series NO.	R6	Drawing	lizhili		Auditing	Wangchangjian	
Dwg Name	Specification	Scale	2:1	Date	18/04/12	Page	