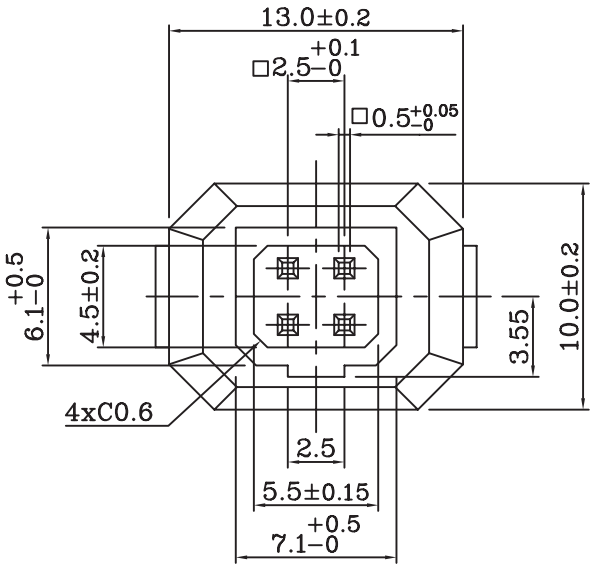

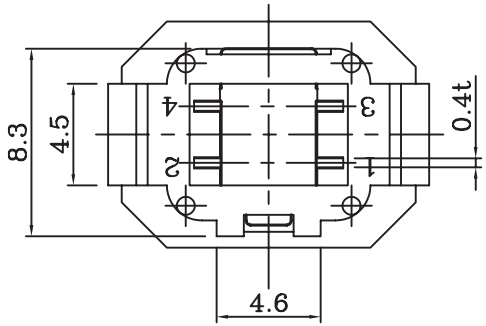

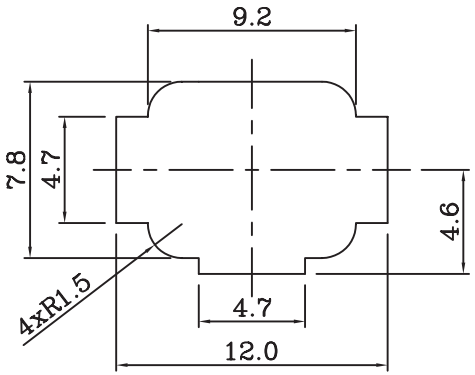

PANEL MOUNTING HOLE

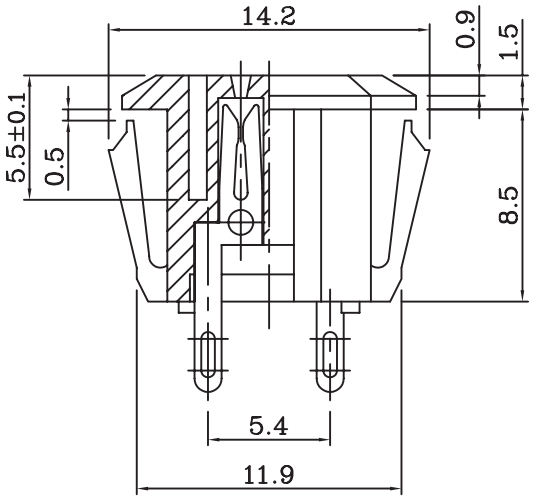

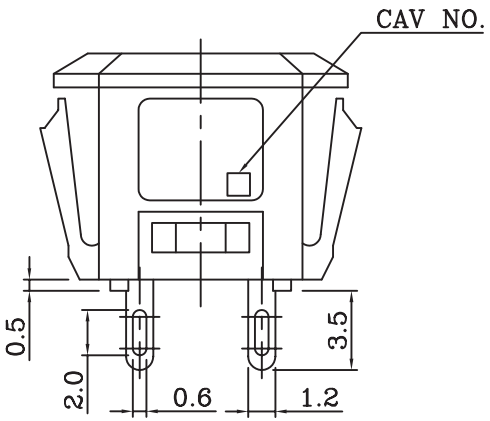

SPECIFICATION:
1.Rating: AC DC 30V 0.5A.
2.Contact Resistance: 20mΩ MAX.
3.Insulation Resistance: DC 100V 100MΩ MIN.
4.Dielectric Strength: AC 150V For 1 Minute
5.Synthesized Inserting Strength: 4.0kg MAX.
6.Synthesized Pulling Strength: 0.3~3.5kg.

IMPORTANT THIS DRAWING FOR REFERENCE ONLY 注意: 此圖只供參考

喜威達企業股份有限公司
SWEETA PRODUCTS CORPORATION
23552 新北市中和區中正路799號1樓
Tel：02-2226-8001 Fax：02-2226-8002
http：//www.sweeta.com.tw E-mail：sweeta.tw@msa.hinet.net

UNIT	UNIT Q'TY	SCALE	TOLERANCE		PRODUCT NO.	SW−002	REV
mm	1	2:1	X.XX±0.1 XX.XX±0.2 XXX.XX±0.3				
DRAWN BY 李 2006.11.21 小英	APPROVED BY 林 2006.11.21 達忠		ID NO		INTERIM NO.		A
			DESCRIPTION	R−002(B01)	NEW NO.		